Typical Not for Construction

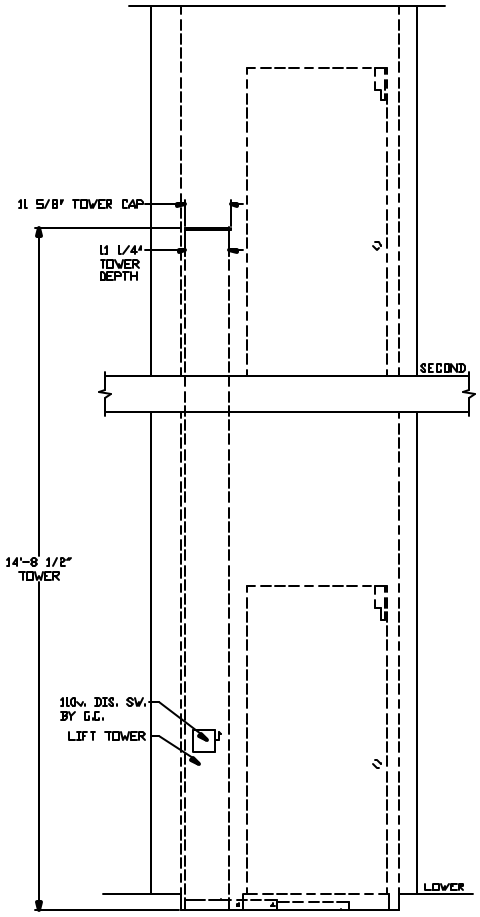

SECTION A-A

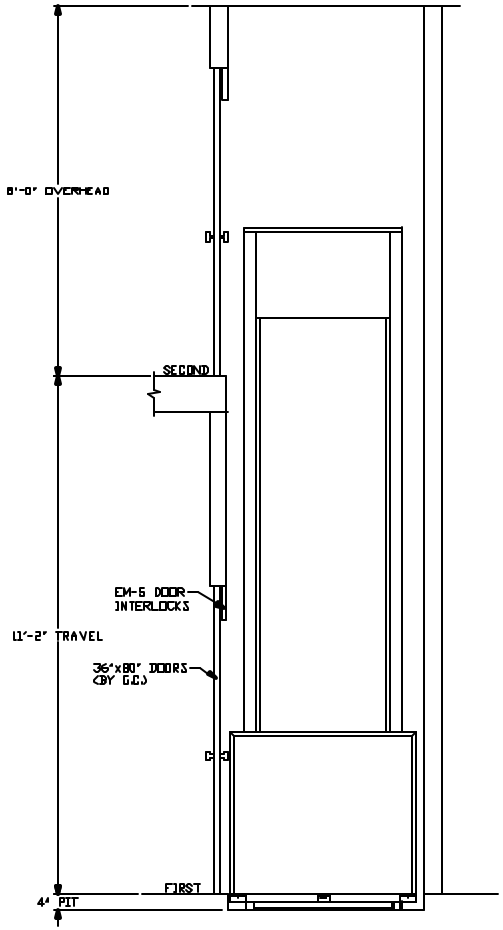

SECTION B-B

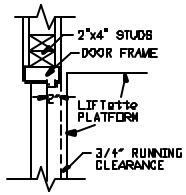

DOOR FRAME DETAIL

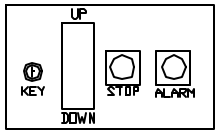

CAR CONTROL (MOUNTED ON THE PLATFORM)

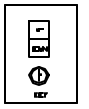

CAR CONTROL (USES A STD. SIZE SURFACE MOUNT BOX SUPPLIED BY INCOA)

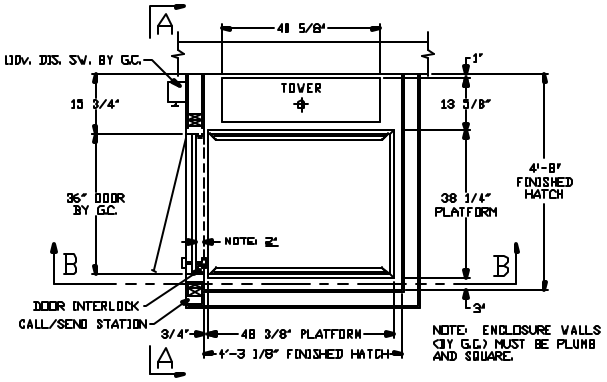

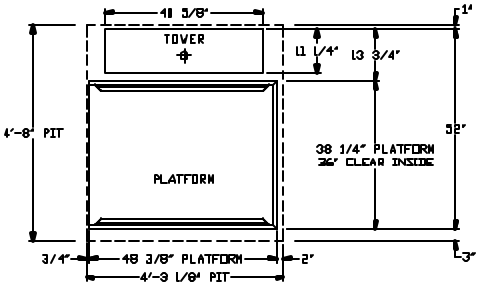

PLATFORM AND TOWER FOOTPRINT

INCLINATOR COMPANY OF AMERICA
HARRISBURG, PA

SHOP DRAWING NAME

ARCHITECT

GENERAL CONTRACTOR

EQUIPMENT INSTALLED BY:

SPECIFICATIONS

L-144
2 LANDING

VERTICAL LIFT

CAR 36"Dx48"Wx42"H CODE(S) 5
CAPACITY 750 LBS. AT 30 F.P.M.
FINISH: BEIGE

- ■ ALL DOORS MUST BE INTERLOCKED
- ■ KEYSWITCH OPERATION
- □ 12 VOLT DC POWER
- □ AUTO FOLD RAMP
- □ STATIONARY RAMP
- □ LANDING GATE w/ INTERLOCK
- □ PLATFORM GATE WITH INTERLOCK
- ■ EMERGENCY ALARM
- ■ EMERGENCY STOP
- □ MANUAL LOWERING
- □ PLATFORM SAFETY MECHANISM
- □ INSTANT REVERSE
- □ LIMIT SWITCHES
- □ ENCLOSURE DOORS BY INCOA
- □ ENCLOSURE BY INCOA

NOTICE TO ELECTRICAL CONTRACTOR:
INSTALL 110v. SINGLE PHASE
DISCONNECT SWITCH

1 H.P. MOTOR 120v. SINGLE PHASE
60 CYCLE
20 AMP MAIN LINE FUSE

INCOA JOB # 99-1245-VL
DEALER P.O. # LE3681
DRAWING BY: T. WOODWARD
DATE: 12/6/99

DRAWING IDENTIFICATION NUMBER

L0185